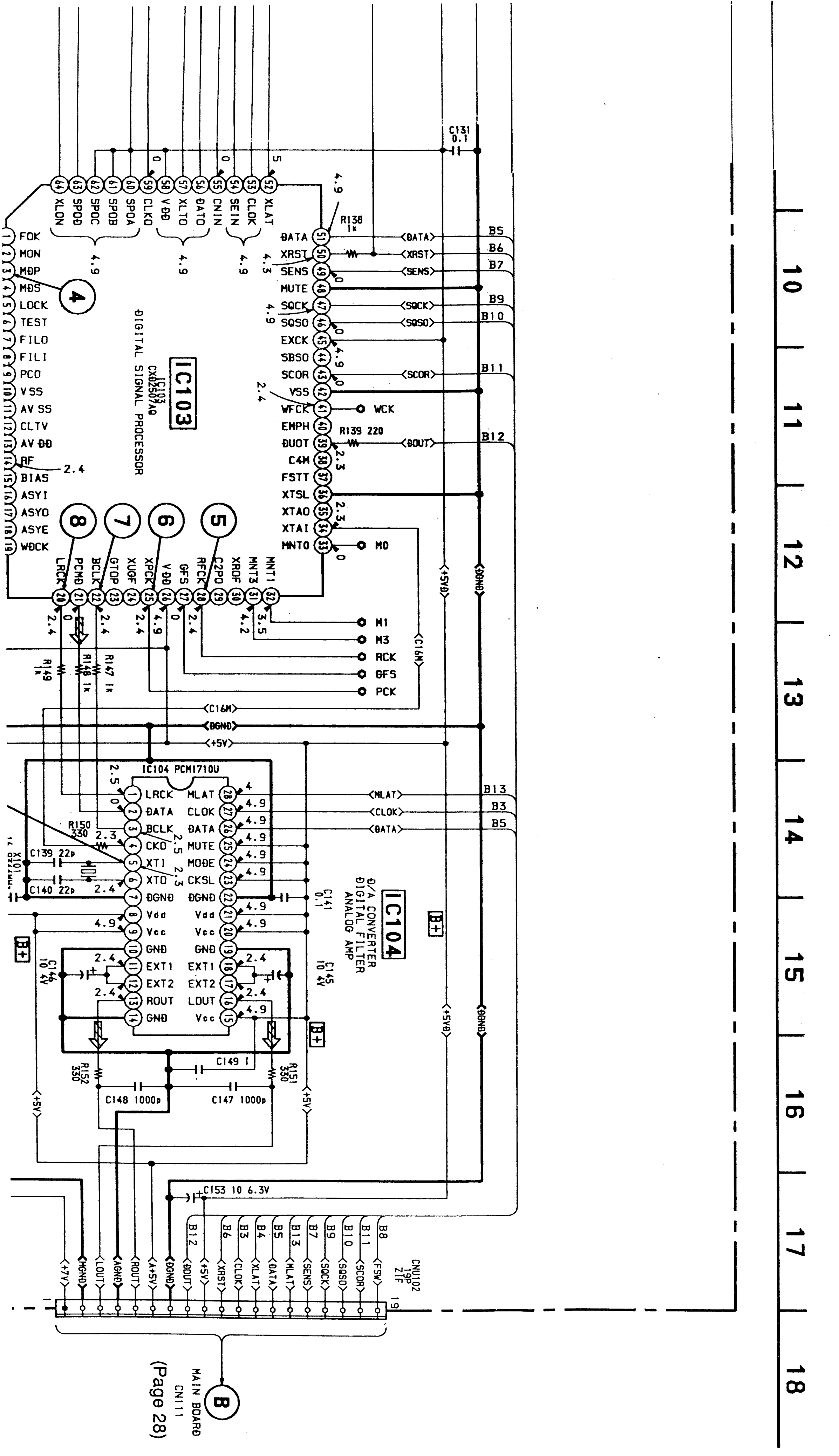
IC103
CXD2507AQ
DIGITAL SIGNAL PROCESSOR
FOK
MON
MDP
MDS
LOCK
TEST
FILO
FILI
PCO
VSS
AV SS
CLTV
AV DD
RF
BIAS
ASYI
ASYO
ASYE
WDCK
XLON
SPOD
SPOC
SPOB
SPOA
CLKO
V DD
XLTO
DATO
CNIN
SEIN
CLOK
XLAT
DATA
XRST
SENS
MUTE
SQCK
SQSO
EXCK
SBSO
SCOR
VSS
WFCK
EMPH
DOUT
C4M
FSTT
XTSL
XTAO
XTAI
MNTO
LRCK
PCMD
BCLK
GTOP
XUGF
XPCK
V DD
GFS
RFCK
C2PO
XROF
MNT3
MNT1
R138 1k
R139 220
C131 0.1
WCK
MO
M1
M3
RCK
GFS
PCK
R149 1k
R148 1k
R147 1k
C16M
DGND
+5V
+5VD
IC104 PCM1710U
D/A CONVERTER
DIGITAL FILTER
ANALOG AMP
LRCK
DATA
BCLK
CKO
XTI
XTO
DGND
Vdd
Vcc
GND
EXT1
EXT2
ROUT
GND
MLAT
CLOK
DATA
MUTE
MODE
CKSL
DGND
Vdd
Vcc
GND
EXT1
EXT2
LOUT
Vcc
R150 330
C139 22p
C140 22p
X101
C141 0.1
C146 10 4V
C145 10 4V
R152 330
R151 330
C149 1
C148 1000p
C147 1000p
C153 10 6.3V
B+
B3
B4
B5
B6
B7
B8
B9
B10
B11
B12
B13
CNU102 19P ZIF
+7V
MGND
LOUT
AGND
ROUT
A+5V
DGND
DOUT
+5V
XRST
CLOK
XLAT
DATA
MLAT
SENS
SQCK
SQSO
SCOR
FSW
1
19
B
MAIN BOARD CN111
(Page 28)
4
5
6
7
8
10
11
12
13
14
15
16
17
18